Electron performance with $J/\psi \to ee$ with the ATLAS detector

Timothée Theveneaux-Pelzer

on behalf of the ATLAS collaboration

LPNHE - Paris

Cracow Epiphany Conference - January 12th, 2011

Motivations

- Detector commissioning and calibration for electrons is made using $Z/\gamma^* \rightarrow ee$

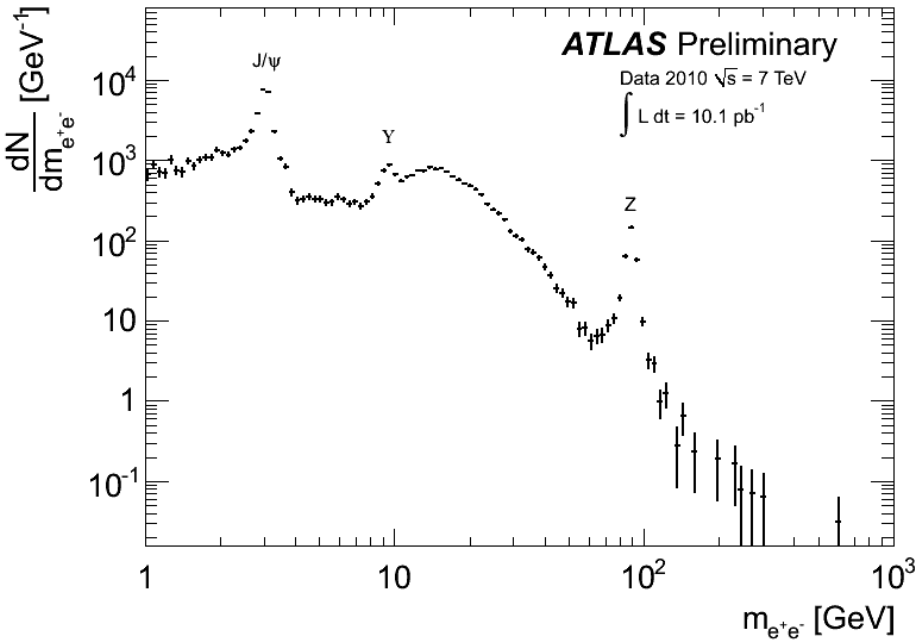

Opposite sign di-electron invariant mass for an integrated luminosity of 10.1 pb-1 collected with a di-electron trigger with a transverse energy threshold of 5 GeV (ATL-COM-PHYS-2010-882)

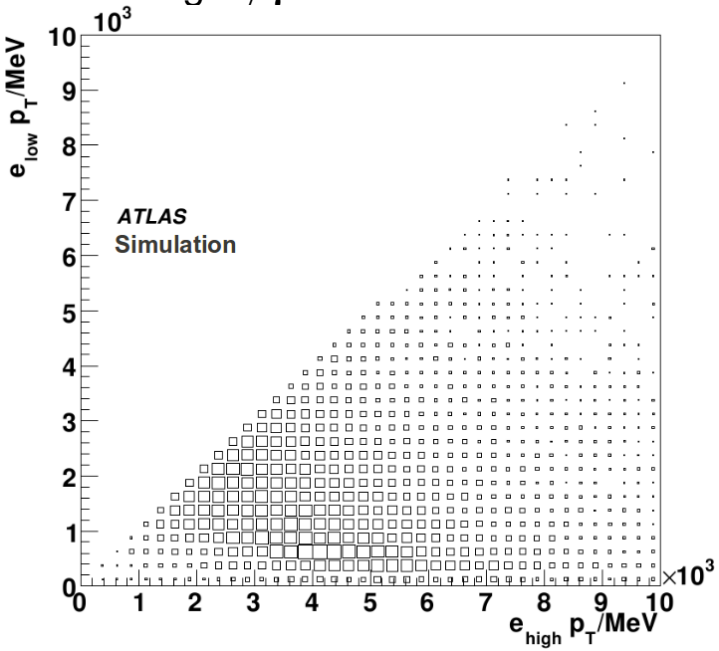

Distribution of the p_T of the 2 electrons from $J/\psi \rightarrow ee$ on 14 TeV simulation (CERN-OPEN-2008-020)

- Direct $J/\psi \rightarrow ee$ decays provide a sample of electrons of low energy to study the detector performance

One year of data taking in ATLAS

- $45.0 pb^{-1} \pm 11\%$ recorded by ATLAS
- Data taking efficiency almost 94% (with stable beam and full detector operational)

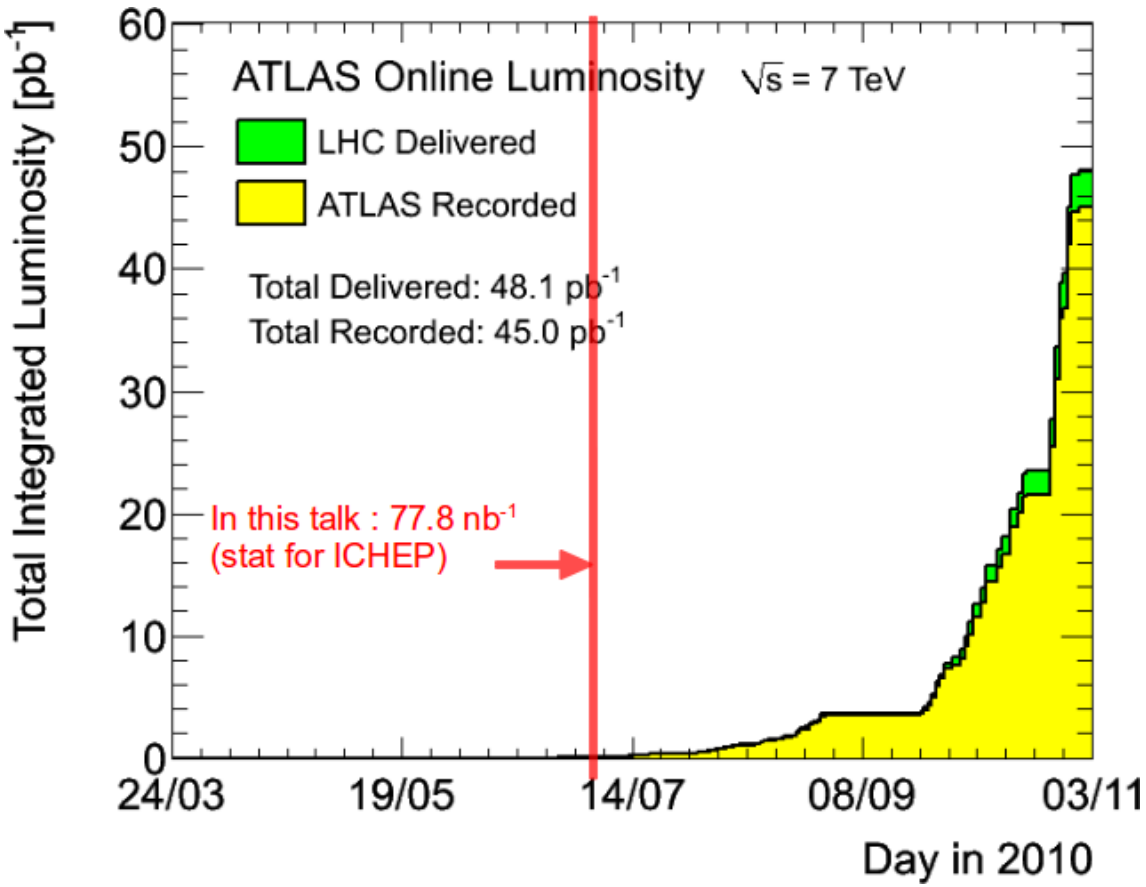

Integrated luminosity delivered by the LHC (green) and recorded by ATLAS (yellow) for $\sqrt{s} = 7 TeV$

The ATLAS detector

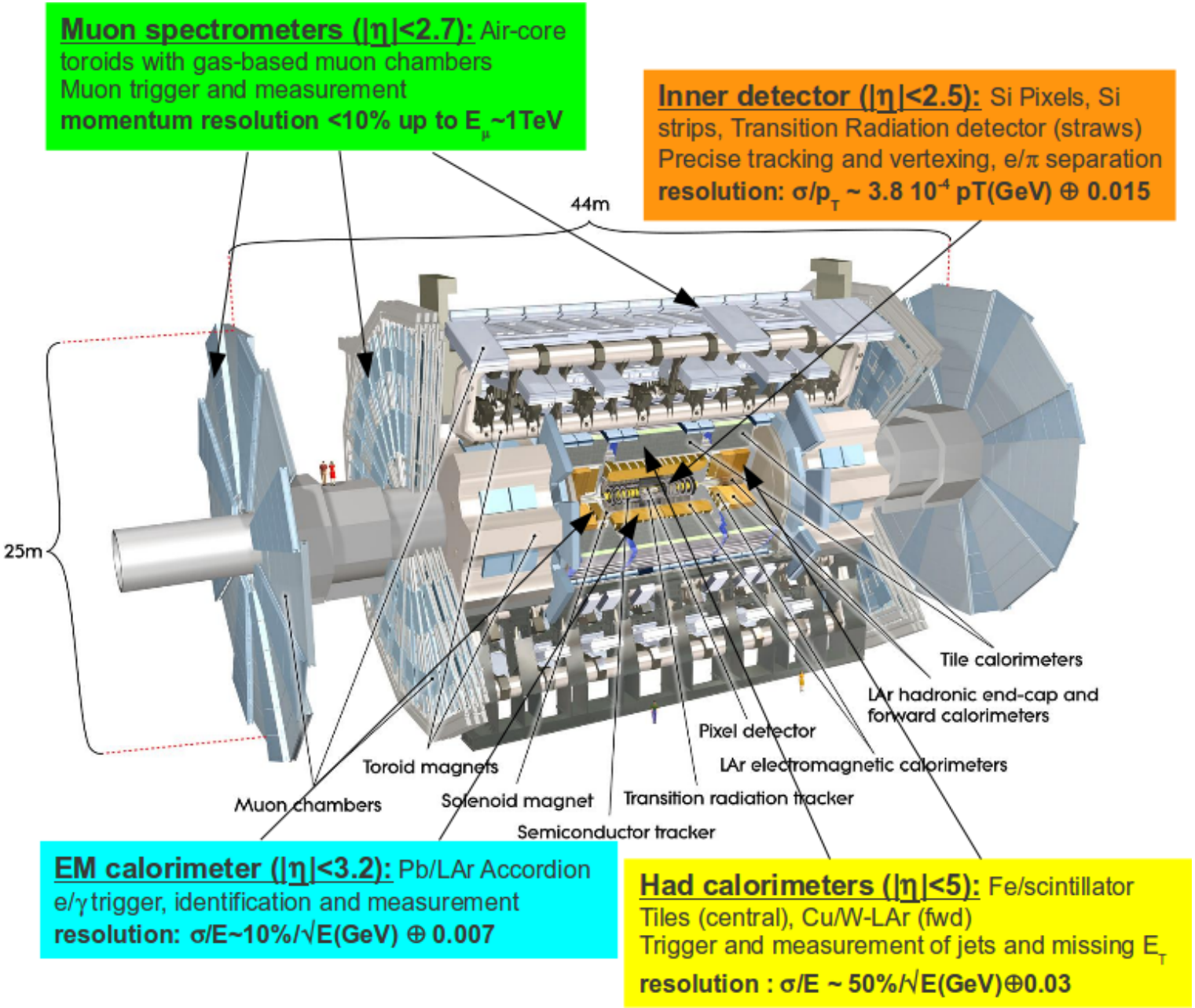

Triggering low-p_T electrons

- ATLAS produces a very large amount of data ; the data-recording rate must be reduced from $40MHz$ down to $\sim 300Hz$; to do this a 3 level trigger is applied : L1, L2 and Event Filter - L1 : hardware ; L2 & EF : High Level Trigger (HLT), software
- Brief trigger history :
  - $\mathcal{L} < 10^{27} cm^{-2} s^{-1}$: minimumbias unprescaled, HLT applies no selection
  - $\mathcal{L} > 10^{27} cm^{-2} s^{-1}$: minimumbias prescaled, other L1 triggers unprescaled
  - $\mathcal{L} \sim 10^{29} cm^{-2} s^{-1}$: lowest threshold L1 menus prescaled, HLT on
- A menu selecting events with at least one electron of $p_T > 5GeV$ with tight identification cuts is used for the latest data periods ($6Hz$)

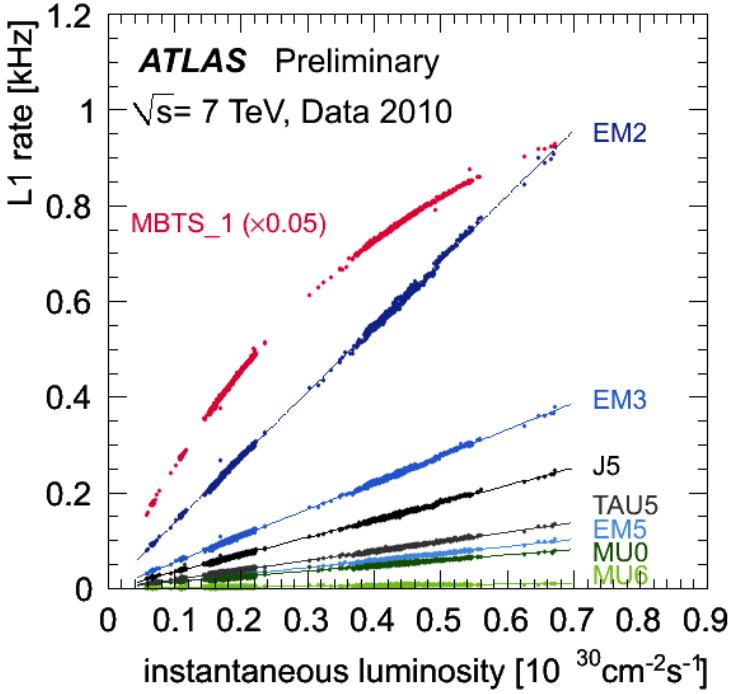

Unprescaled L1 rates as a function of the instantaneous luminosity. Minimum bias (MBTS) is scaled down by a factor of 20. Measurements were made with two colliding bunches in June 2010.

Electron reconstruction

For electron reconstruction, both the electromagnetic calorimeter and the tracker are used

- The reconstruction algorithm searches for seed energy clusters in the EM calorimeter with significant energy ; seed clusters are a fixed-size rectangular window - $E > 2.5GeV$ in a 3x5 (ηxϕ) window - or the result or a nearest-neighbor clustering algorithm - aggregation of cells with $E > 4\sigma_{noise}$ (latest used for early selection of $J/\psi \rightarrow ee$ with low statistics)
- It matches clusters with tracks fitted from the hits in the inner detector ; the object is classified as an electron, photon or as converted photon
- Energy and position are calculated ; energy is a weighted sum of the layer energies with corrections to take into account detector effects

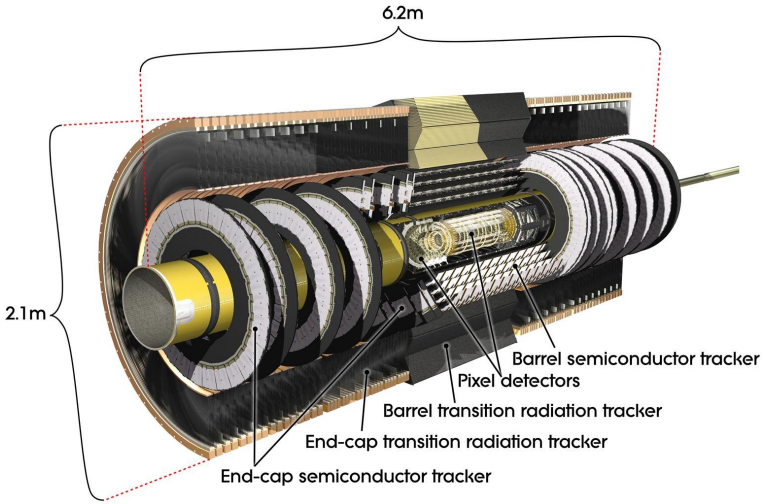

The inner detector

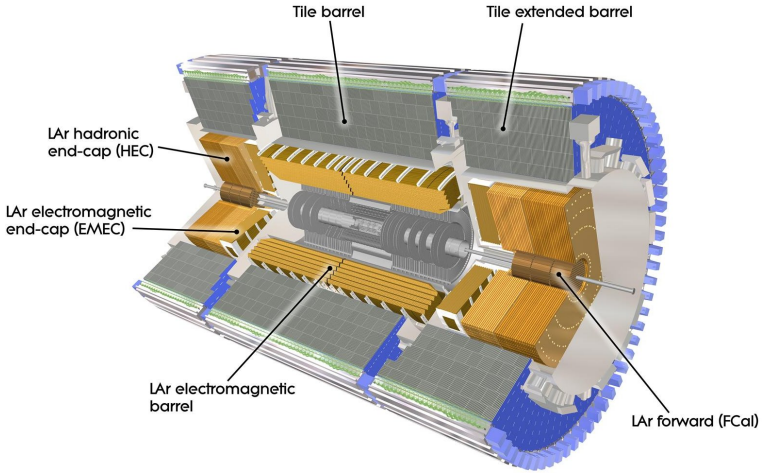

The calorimetry system

Electron identification

- Use of variables to discriminate the electrons wrt. the backgrounds (hadrons and converted photons) build from all the inner detector sub-systems (Pixels, SCT and TRT) and from the all EM calorimeter samplings
- 3 standards levels of selection (loose, medium, tight) ; non-standard identification cuts used instead to extract $J/\psi \rightarrow ee$ signal : selection on hadronic leakage, shower shapes in 2nd and 1st sampling, number of tracker hits and a strict selection on fraction of high-level threshold hits in TRT

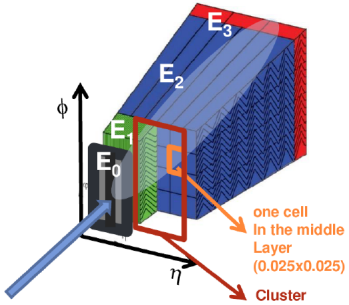

- For illustration, Data/MC comparison with $1nb^{-1}$ for inclusive electrons, pre-selected with $E_T > 7GeV$, $|\eta| < 2.0$, cracks between calorimeters excluded (ATLAS-COM-PHYS-302)

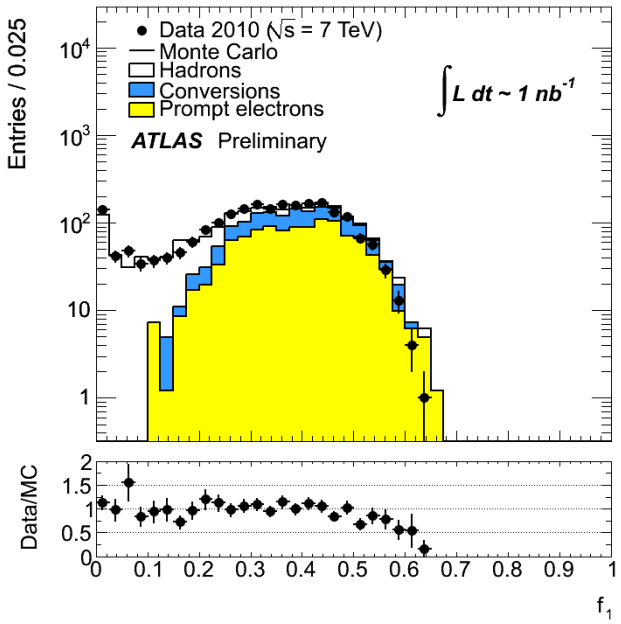

f1 : fractional energy in layer 1, tight selection

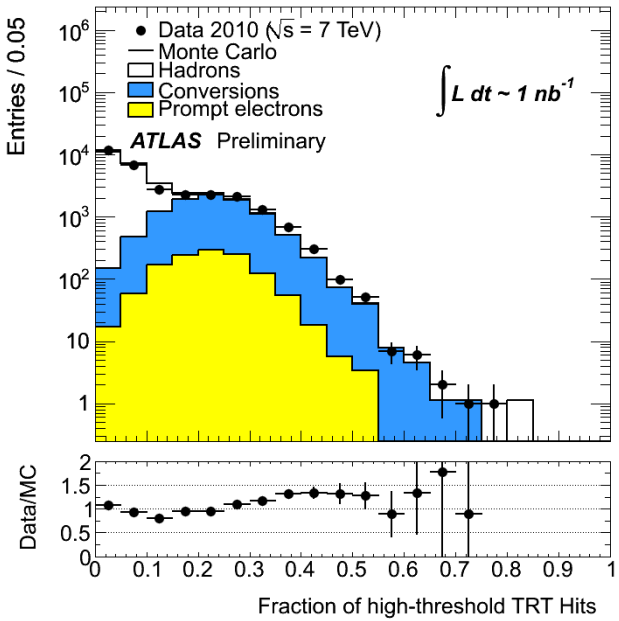

TR_{frac} : fraction of high level threshold hits in TRT, loose selection

Electron pairs selection

- Using the first $77.8 nb^{-1}$ of data
- Selecting electrons with :
  - $|\eta| < 2$ (no TRT beyond)
  - outside barrel/end-cap crack region ($1.37 < |\eta| < 1.52$)
  - passing identification cuts
- Tag-and-probe analysis :
  - one tag with $p_T(track) > 4GeV$, $E_{rawcluster} > 2.5GeV$ and stricter cut on high level threshold hits
  - one probe with $p_T(track) > 2GeV$
- Tag and probe have opposite charge
- Aim : fitting J/ψ mass peak, extracting the J/ψ kinematic variables and the shower shapes of the electrons, and compare the data to the simulation

J/ψ mass fit

- There are different ways to measure the electrons momenta :
  - from track direction parameters and from cluster energy (Slightly low : calorimeter calibrations incomplete for very low energies)
  - from track parameters only (Slightly low : ignoring bremsstrahlung)
  - from the parameters of the track refitted to take bremsstrahlung energy losses into account (Gaussian Sum Filter [1])

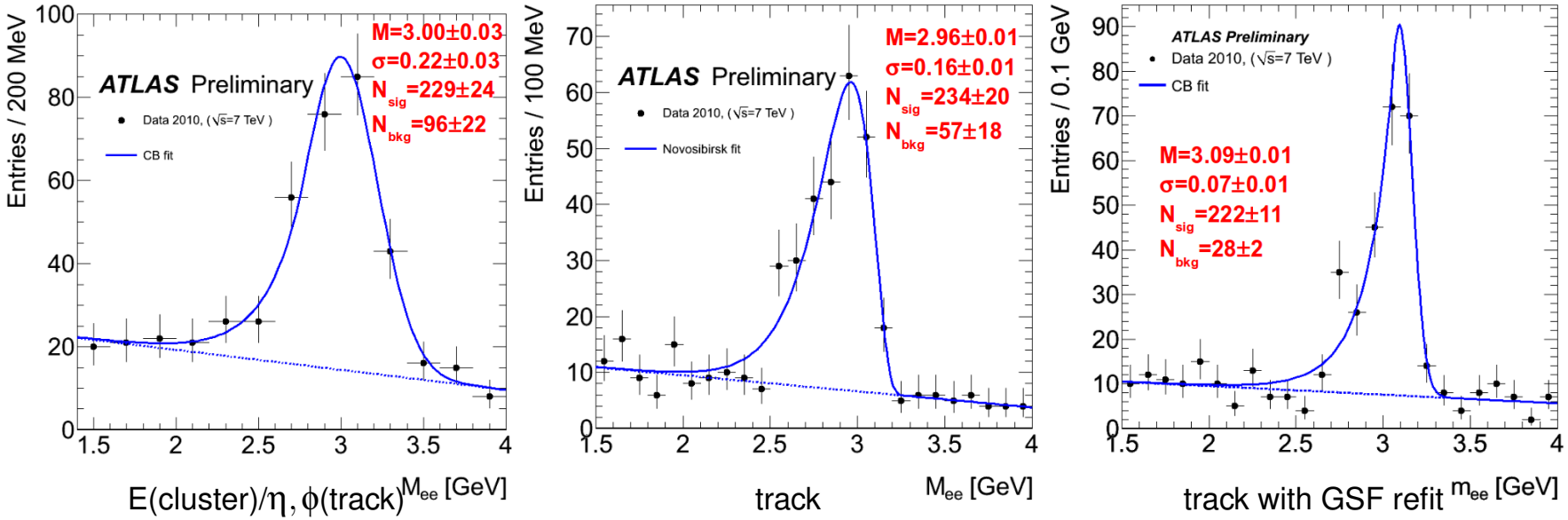

Invariant mass of the electron pairs calculated from calorimeter energy and track direction, from track parameters only and from track parameters with refit to take bremsstrahlung refit, with $77.8 nb^{-1}$ (ATL-COM-PHYS-2010-518)

J/ψ mass (PDG) : 3.096 ± 0.011 GeV

1. R. Frühwirth, Comp. Phys. Comm. **100** (97) ; T. Atkinson, PhD thesis, U. Melbourne (06)

Kinematics of the J/ψ candidate

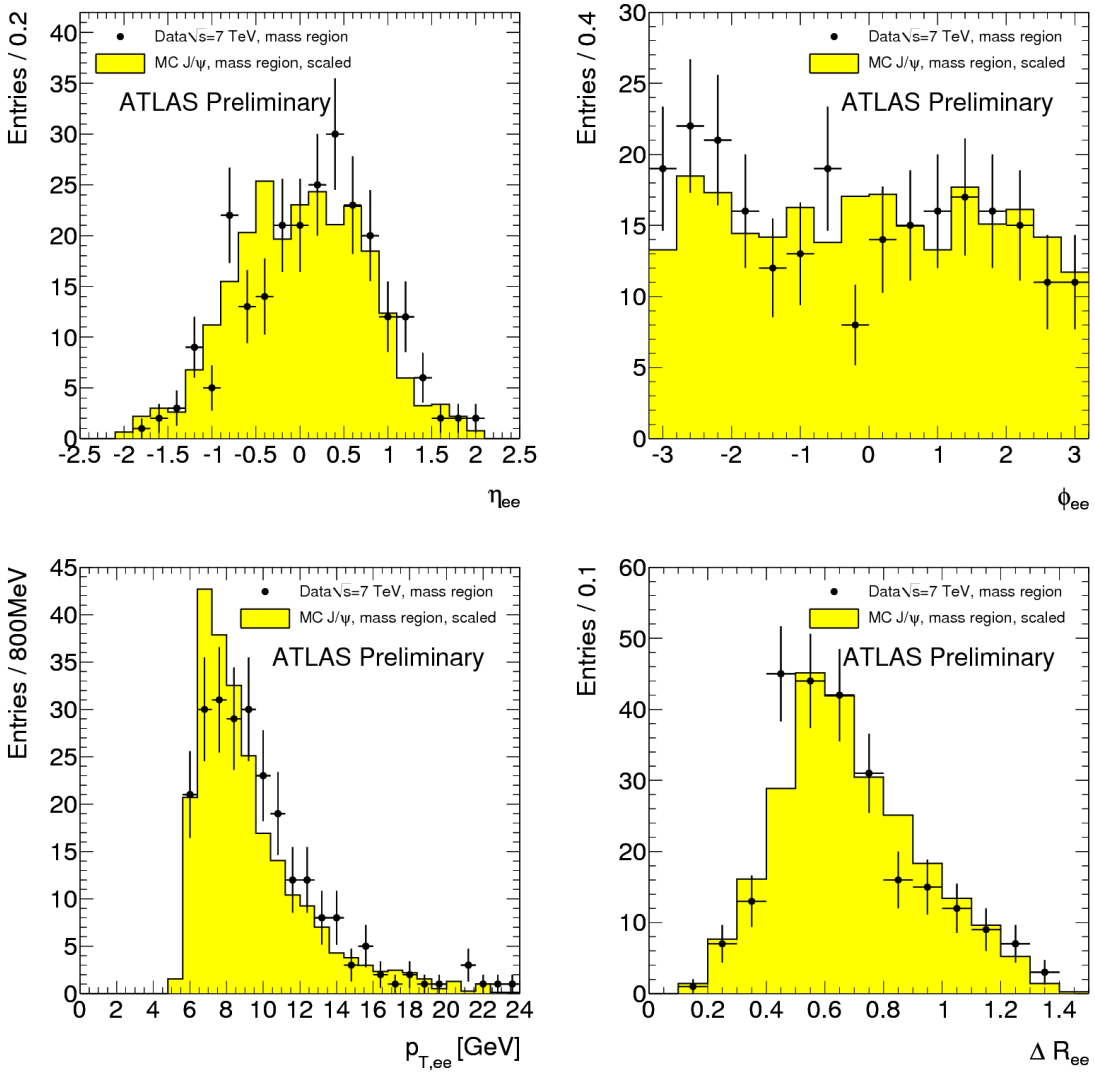

Kinematic distributions of the electron pairs (ATL-COM-PHYS-2010-518)

- Kinematics variables of the J/ψ candidate by taking pairs in the $2.5 < m_{ee}(track) < 3.2 GeV$ range with $f_1 > 0.15$
- The simulation is in agreement with the data given the uncertainties

Shower shapes distributions

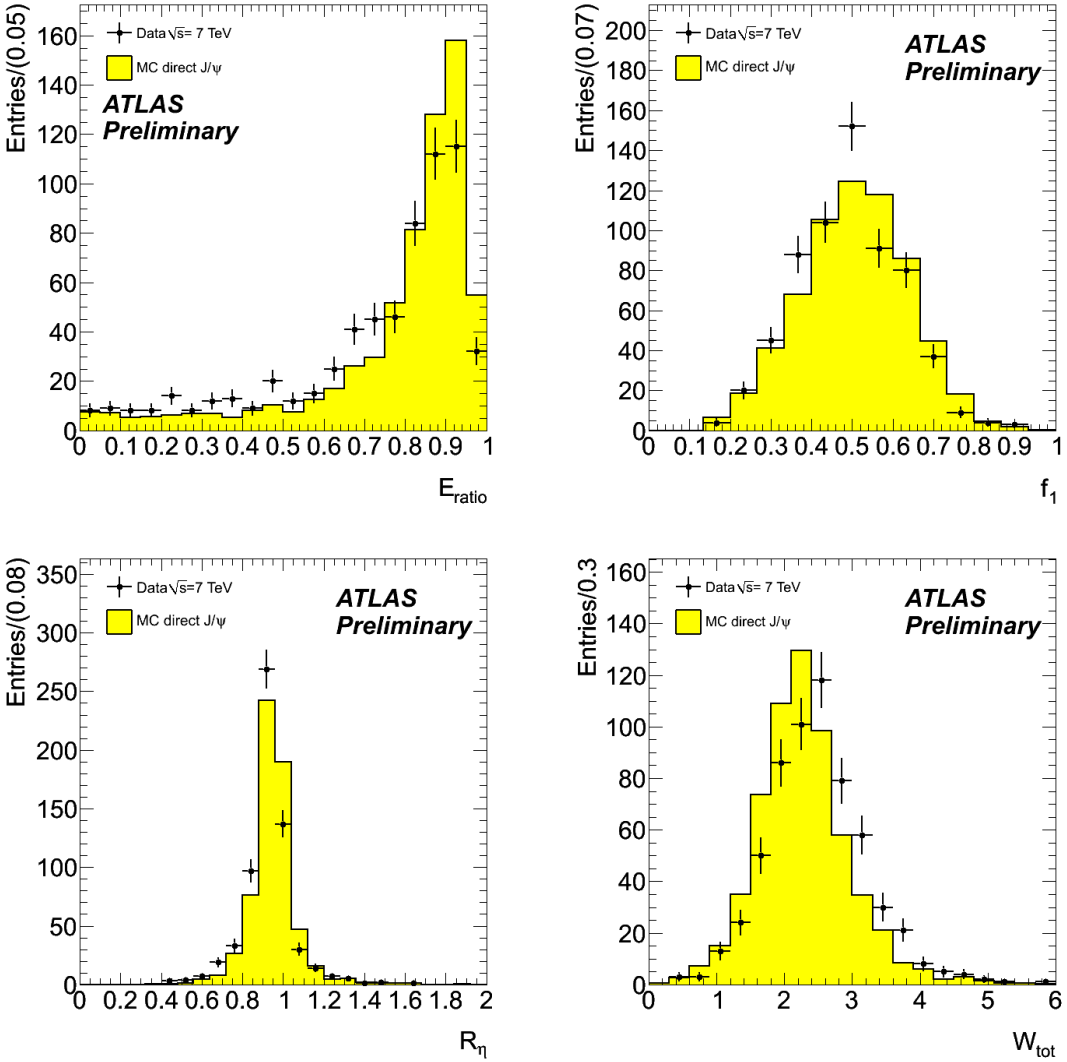

Distribution of four discriminating variables for the electrons of the J/ψ candidates (ATL-COM-PHYS-2010-518)

- Shower shape distribution obtained by maintaining the tag cut but removing the shower shapes cuts on the other electron (probe) - no background subtraction ($\sim$ 15% remaining)
- The peak provides a sample of electrons which are used to check the modelling of the electrons discriminating variables
- Some systematics effects emerge
- More studies are under way to properly extract shower shapes, with the full statistics
  - E_{ratio} : ratio of the difference of the 2 largest energy deposits in the first layer over the sum of these energies
  - f_1 : fractional energy in layer 1
  - R_η : ratio $E_{3\times7}/E_{7\times7}$ ($\eta \times \phi$) for cells in the second layer
  - W_{tot} : shower width in the η direction for the first layer

Conclusion

- ATLAS and LHC have performed well for the first year of collision data
- First analysis with $7\,TeV$ data encouraging
- The results shown here take only a small part of the available statistics into account
- The $J/\psi \rightarrow ee$ give a sample of low-p_T electrons which can be used to study the detector performance
- Further studies are under way for shower-shapes extraction and efficiency measurement

backup slides

Links to public results

Di-electron Invariant Mass Spectrum (ATL-COM-PHYS-2010-882) :

https://atlas.web.cern.ch/Atlas/GROUPS/PHYSICS/EGAMMA/PublicPlots/20101110/eeSpectrum/ATL-COM-PHYS-2010-882/index.html

Expected performance of the ATLAS experiment (CERN-OPEN-2008-020) :

http://cdsweb.cern.ch/record/1125884

Electron plots for Summer conferences 2010 (ATL-COM-PHYS-2010-302) :

https://atlas.web.cern.ch/Atlas/GROUPS/PHYSICS/EGAMMA/PublicPlots/20100602/ATL-COM-PHYS-2010-302/index.html

Electron performance of the ATLAS detector using the J/psi -> e + e - decays(ATL-COM-PHYS-2010-518) :

https://atlas.web.cern.ch/Atlas/GROUPS/PHYSICS/EGAMMA/PublicPlots/20100721/ATL-COM-PHYS-2010-518/index.html

Inner detector

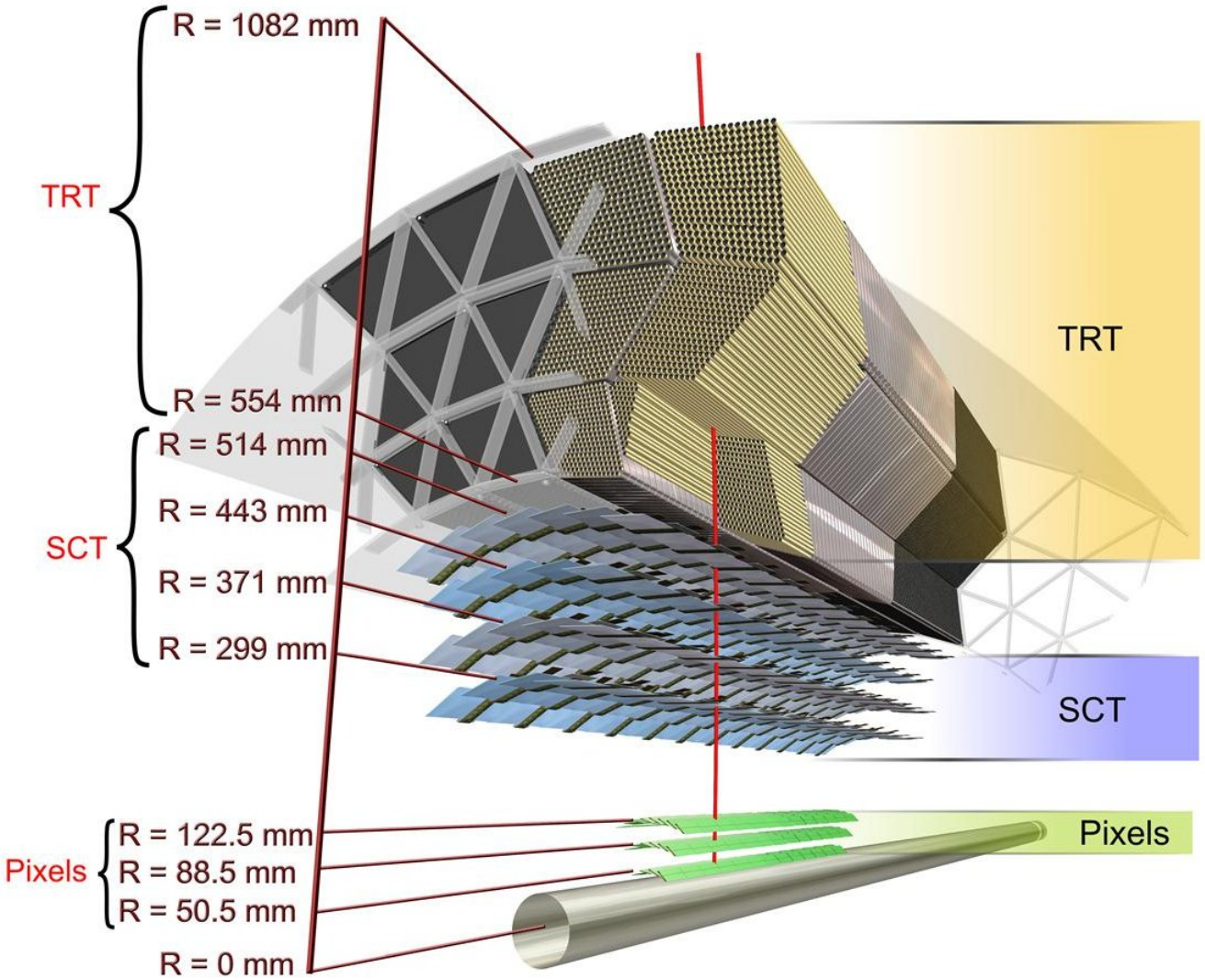

The inner detector

- Transition Radiation Tracker : Straw tubes interleaved with polypropylene radiator ($\sim 80.10^6$ channels)
- Semi-Conductor Tracker : silicon microstrips layers (4 layers in barrel region)
- Pixel detector : high-resolution space points ; used for conversion rejection and flavour tagging

Electromagnetic calorimeter

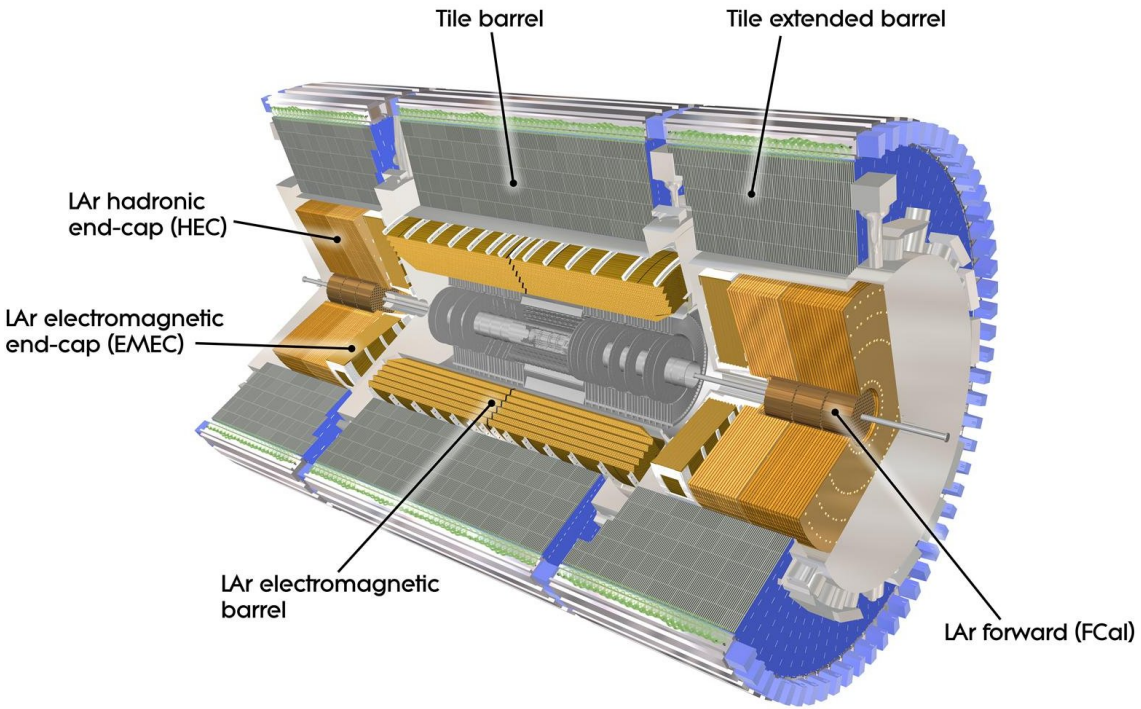

The calorimetry system

- Pb/Liquid Ar calorimeters with accordion geometry
- 3 longitudinal samplings ($|\eta| < 2.5$) + presampler ($|\eta| < 1.8$)
- Fine segmentation in η in the first sampling for precision η measurements and e/π^0 rejection

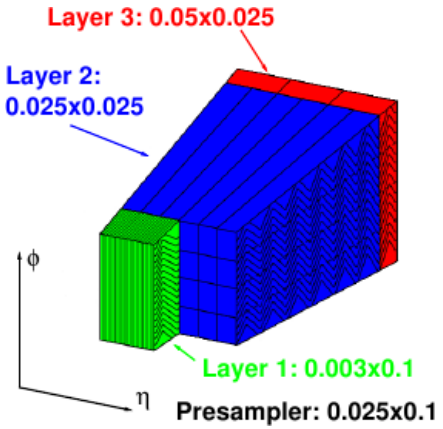

Segmentation of the 3 electromagnetic calorimeters samplings

Integrated luminosity for 7TeV collisions

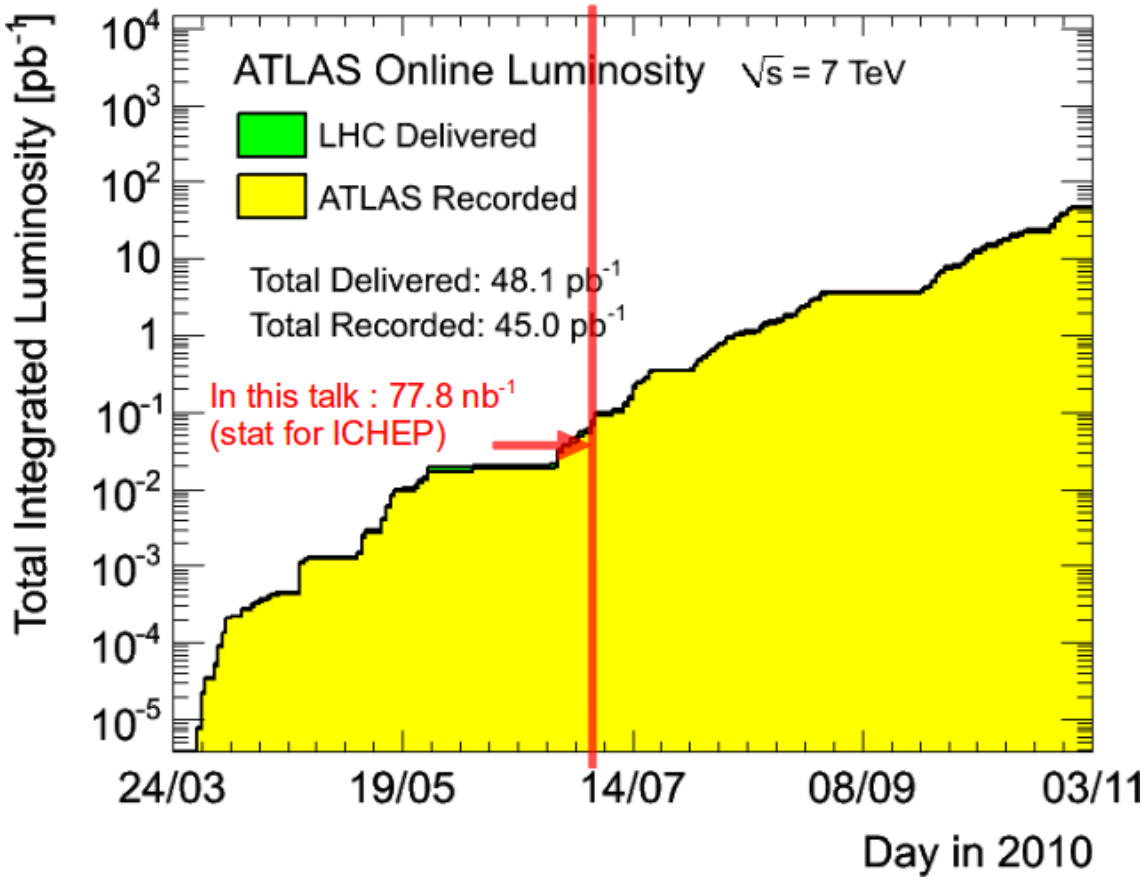

Cumulative luminosity vs. day delivered by the LHC (green) and recorded by ATLAS (yellow) for $\sqrt{s} = 7TeV$, in logarithmic scale

Peak luminosity for 7TeV collisions

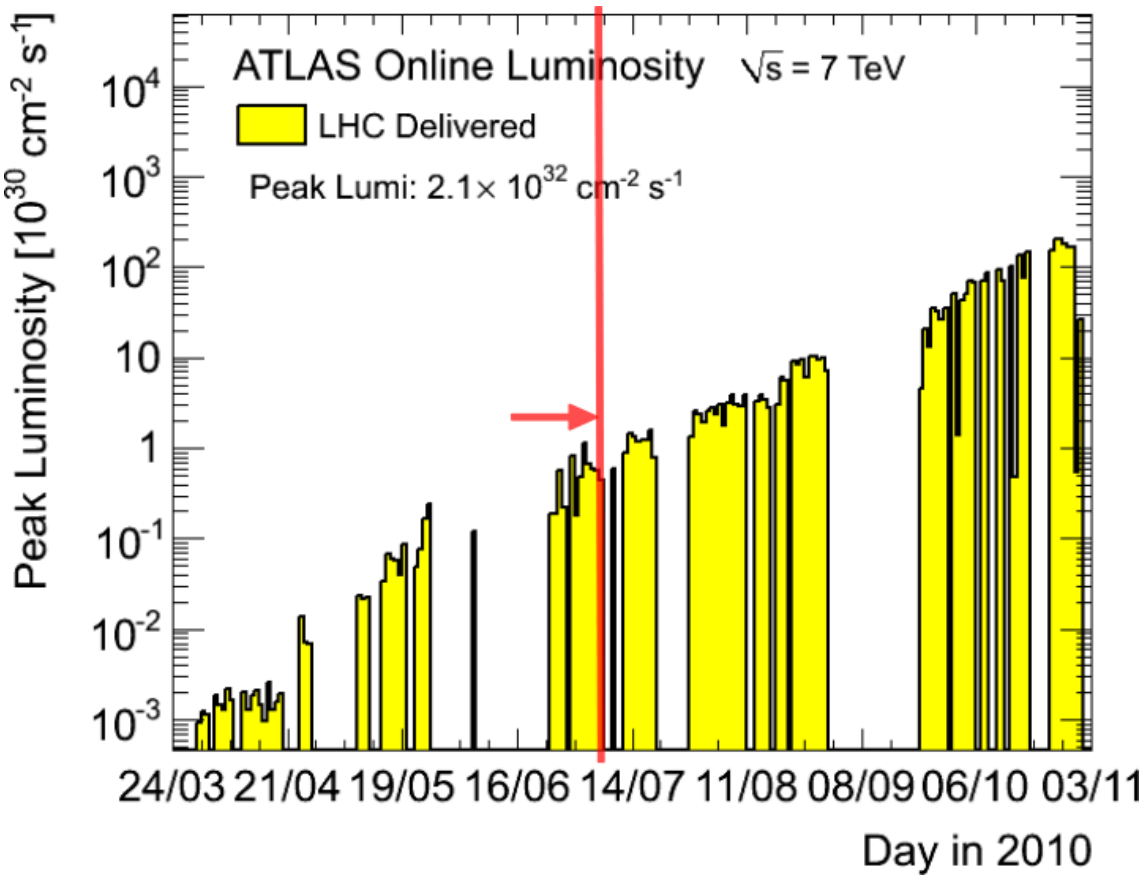

Maximum instantaneous luminosity delivered by the LHC vs. day for $\sqrt{s} = 7TeV$, in logarithmic scale