WINHAC++

The object-oriented Monte Carlo for the charged-current Drell-Yan process

Kamil Sobol

Institute of Physics, Jagiellonian University, Cracow, Poland

January 12, 2010

in collaboration with: W. Płaczek, A. Siódmok, P. Stecko

Outline

1. Charged-current Drell-Yan
   - Basics
   - Multiphoton radiation
2. Motivation
   - Physics
   - IT
3. Status

Charged-current Drell-Yan – Basics

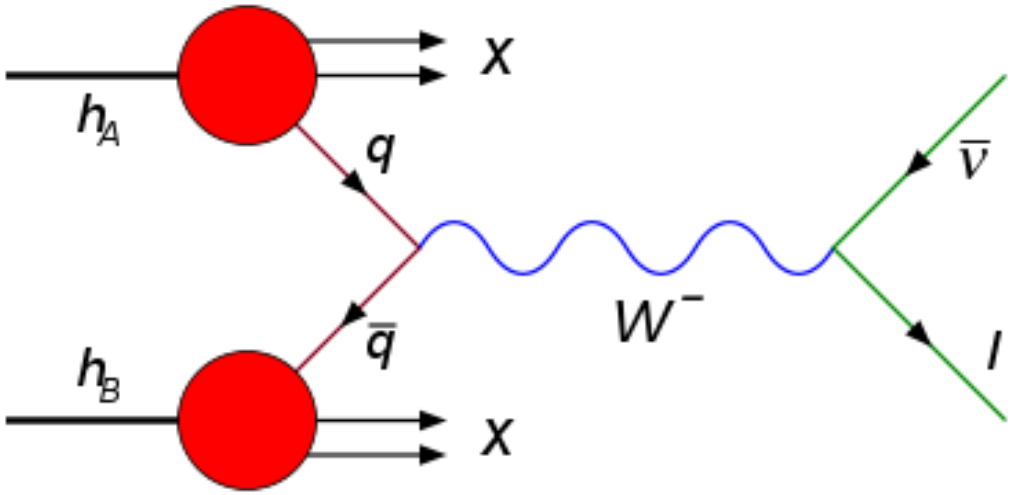

⇒ Cross section - factorization formula:

$$\sigma = \sum_{q_1,q_2} \int dx_a dx_b f_{q_1/h_a}(x_a, Q^2) f_{q_2/h_b}(x_b, Q^2) \sigma_{q_1 q_2}(Q^2)$$

Charged-current Drell-Yan – Multiphoton radiation

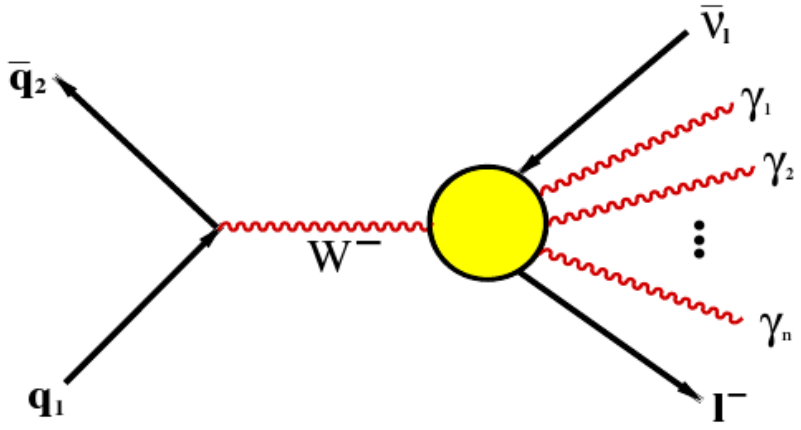

⇒ $\mathcal{O}(\alpha)$ Yennie–Frautschi–Suura (YFS) exponentiated cross section:

$$\sigma_{YFS} = \sum_{n=0}^{\infty} \int \frac{d^3 q_l}{q_l^0} \frac{d^3 q_\nu}{q_\nu^0} \rho_n^{(1)}(p_1, p_2, q_1, q_2, k_1, ..., k_n)$$

$$\rho_n^{(1)} = e^{Y(Q,q_l;k_s)} \frac{1}{n!} \prod_{i=1}^{n} \frac{d^3 k_i}{k_i^0} \tilde{S}(Q, q_l, k_i) \theta(k_i^0 - k_s) \delta^{(4)}(p_1 + p_2 - q_l - q_\nu - \sum_{i=1}^{n} k_i)$$

$$\times \left[\bar{\beta}_0^{(1)}(p_1, p_2, q_l, q_\nu) + \sum_{i=1}^{n} \frac{\bar{\beta}_1^{(1)}(p_1, p_2, q_l, q_\nu, k_i)}{\tilde{S}(Q, q_l, k_i)} \right]$$

, details in backup slides

(W. Płaczek and S. Jadach, Eur. Phys. J. C29, 325 (2003))

Motivation – Physics

- Improve precision of W mass
  - $\Rightarrow$ Consistency check of SM
  - $\Rightarrow$ Better constraints on the Higgs mass
- Background for new physics searches
- "Standard candle" for other processes
- New resonances, e.g. W', KK ?

Motivation – IT

Why C++ ?

- HEP migrates to C++ (Pythia8, Herwig++, Sherpa, HepMC)
- Well known popular platform

  $\Rightarrow$ more developers

- Easier maintenance and development

  $\Rightarrow$ less code, more readable
  $\Rightarrow$ many tools (IDEs, modeling, etc.)

Status – Stage 1

Closed - June 2010

- Born
- Multiphoton FSR (Final State Radiation) whitin $\mathcal{O}(\alpha)$ YFS exclusive exponentiation scheme
- $\mathcal{O}(\alpha)$ electroweak (EW) corrections in FSR
- Parton Distribution Functions (PDFs) from LHAPDF
- FOAM used to generate 2-dim (x_a, x_b) distributions (based on PDFs)

$\Rightarrow$ Very good agreement with Fortran version (1.32) of WINHAC proved by series of high-statistics numerical tests on PC farm (see backup slides)

Status – Stage 2

In progress (development almost completed)

- Standard event records
  - Les Houches Event Accord (LHE)
  - HepMC
- ISR QCD&QED Parton Shower & Hadronization by Pythia8 through LHE on event-by-event flow
  - FIFO pipes
  - Threads (Boost library)
- Optimization (thanks to P. Stecko)

  $\Rightarrow$ reached factor 1.4 (C++ vs Fortran)

Status – Stage 3

To do:

- QED interferences with ISR
- Full $\mathcal{O}(\alpha)$ EW corrections
- Polarized W bosons

Status – Stage 4

To do:

- $\mathcal{O}(\alpha^2)$ QED FSR
- New resonances: W', KK, ...
- Interface to *KRKMC*
  (ISR QCD Parton Shower, S. Jadach et al.)

Summary

- WINHAC++ under development:
  - ⇒ Stage 2 almost ready for testing
  - ⇒ At the end of Stage 3 WINHAC++ should cover WINHAC functionalities
  - ⇒ Stage 4 is open to new ideas
- New stable version should be released after Stage 2 tests
- Twin brother — ZINHAC — for neutral current Drell-Yan process (A. Siódmok, `http://th-www.if.uj.edu.pl/ZINHAC`)

How to get WINHAC++?

⇒ Releases:
`http://th.if.uj.edu.pl/~sobol/WINHAC/releases/`

⇒ Source repository & releases:
`http://winhacplusplus.googlecode.com/`

Backup – Numerical Tests

Proces		σ_{Born} [nb]	δ_{QED} [%]	δ_{weak} [%]
$u\bar{d} \to W^+ + X \to e^+\nu_e, \mu^+\nu_\mu + X$	W	15.00753135(2)	−0.0349(5)	−0.2837(7)
	W++	15.00753132(3)	−0.0345(5)	−0.2837(7)
$pp \to W + X \to e\nu_e, \mu\nu_\mu + X$	W	35.54376(5)	−0.0368(5)	−0.2837(7)
	W++	35.54384(5)	−0.0390(5)	−0.2830(7)
$pp \to W^- + X \to e^-\bar{\nu}_e + X$	W	7.574157(12)	−0.0352(6)	−0.2794(8)
	W++	7.574149(12)	−0.0344(6)	−0.2809(8)
$pp \to W^+ + X \to e^+\nu_e + X$	W	10.197775(16)	−0.0349(6)	−0.2794(8)
	W++	10.197802(15)	−0.0369(6)	−0.2794(8)
$pp \to W^- + X \to \mu^-\bar{\nu}_\mu + X$	W	7.574150(12)	−0.0326(5)	−0.2880(7)
	W++	7.574116(12)	−0.0317(5)	−0.2887(7)
$pp \to W^+ + X \to \mu^+\nu_\mu + X$	W	10.197765(16)	−0.0328(5)	−0.2880(7)
	W++	10.197749(15)	−0.0323(5)	−0.2885(7)
$pp \to W^- + X \to \tau^-\bar{\nu}_\tau + X$	W	7.572035(12)	−0.0793(5)	−0.2928(7)
	W++	7.572021(12)	−0.0796(5)	−0.2926(7)
$pp \to W^+ + X \to \tau^+\nu_\tau + X$	W	10.194957(16)	−0.0799(5)	−0.2928(7)
	W++	10.194945(15)	−0.0799(5)	−0.2938(7)

Table: Comparison – cross sections obtained by WINHAC and WINHAC++ (2×10^9 events).

Backup – Numerical Tests

Lepton transverse momentum (Born)

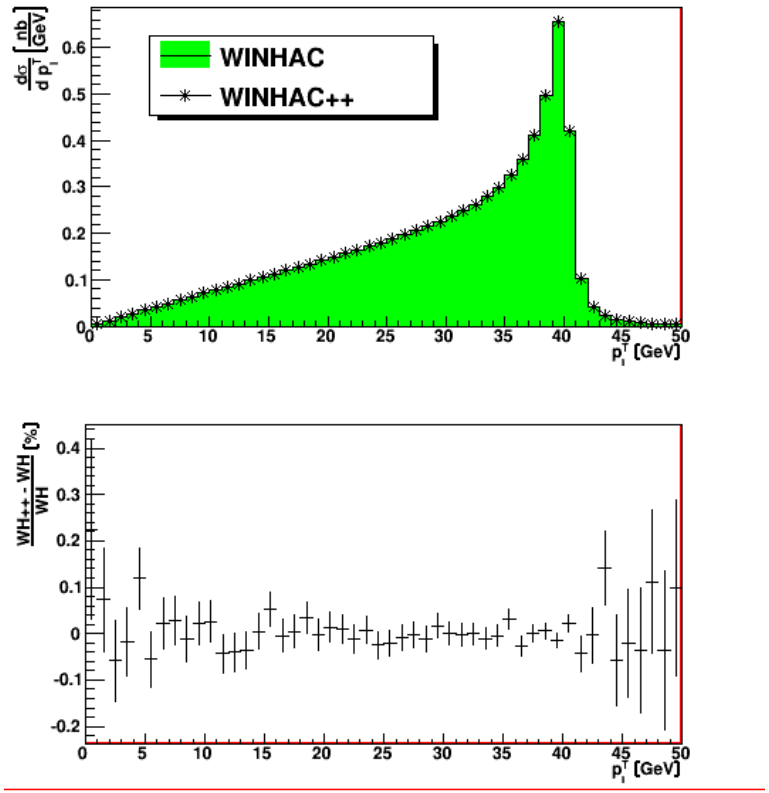

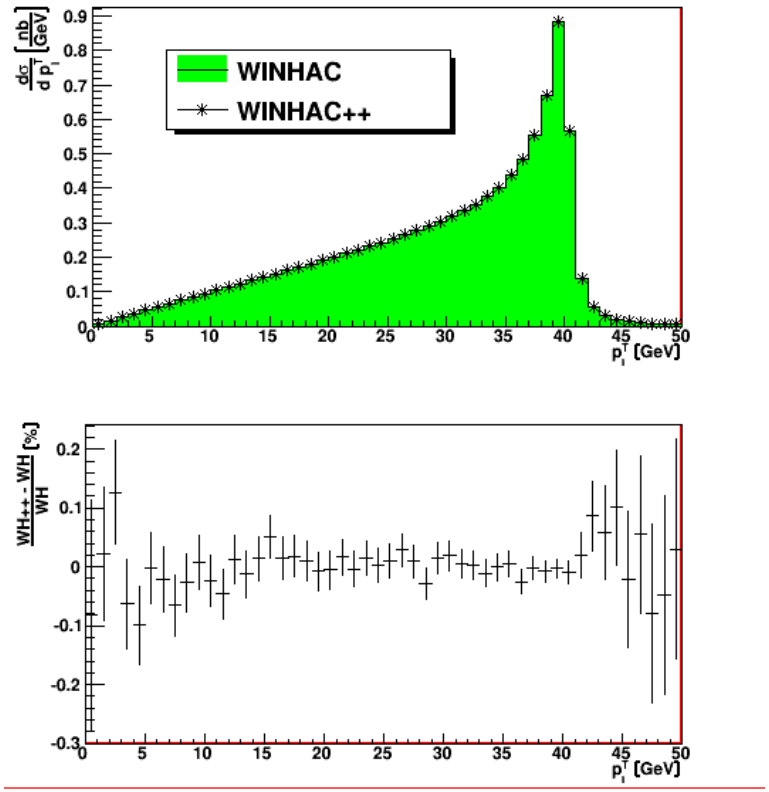

$pp \to W^- + X \to e^- \bar{\nu}_e + X$ $\qquad$ $pp \to W^+ + X \to e^+ \nu_e + X$

Backup – Numerical Tests

Lepton transverse momentum (YFS QED $\mathcal{O}(\alpha)$)

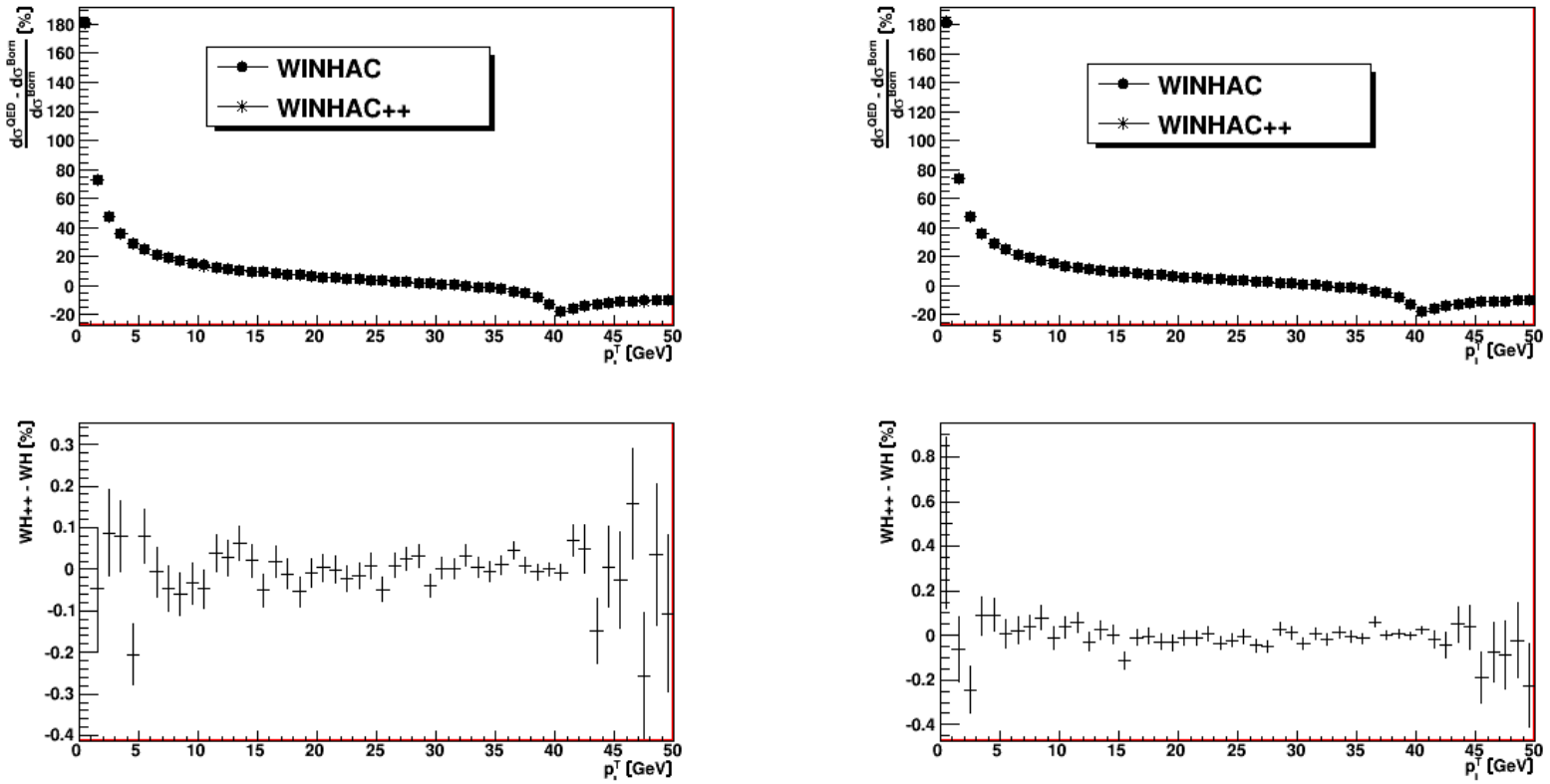

$pp \to W^- + X \to e^- \bar{\nu}_e + X$ $\qquad$ $pp \to W^+ + X \to e^+ \nu_e + X$

Backup – YFS Form Factor

Gauge–invariant resummation of IR contributions:

$$Y(Q, q_l; k_s) = \underbrace{2\alpha\Re B(Q, q_l; m_\gamma)}_{\text{virtual photons}} + \underbrace{2\alpha\tilde{B}(Q, q_l; m_\gamma, k_s)}_{\text{real photons}}$$

where:

$$B(Q, q; m_\gamma) = \frac{i}{8\pi^3} \int \frac{d^4k}{k^2 - m_\gamma^2 + i\epsilon} \left(\frac{2q-k}{k^2 - 2kq + i\epsilon} - \frac{2Q-k}{k^2 - 2kQ + i\epsilon} \right)^2$$

$$\tilde{B}(Q, q; m_\gamma, k_s) = -\frac{1}{8\pi^2} \int_{k^0 < k_s} \frac{d^3k}{k^0} \left(\frac{q}{kq} - \frac{Q}{kQ} \right)^2$$

Backup – non–IR YFS functions

Zero real hard photons:

$$\bar{\beta}_0^{(1)}(p_1, p_2, q_l, q_\nu) = \bar{\beta}_0^{(0)}(p_1, p_2, q_l, q_\nu)\left[1 + \delta^{(1)}(Q, q_l, q_\nu)\right]$$

$$\bar{\beta}_0^{(0)} = \frac{1}{8s(2\pi)^2}\frac{1}{12}\sum\left|M^{(0)}\right|^2 \leftarrow \text{Born-like contribution}$$

$\mathcal{O}(\alpha)$ electroweak virtual corrections:

$$\delta^{(1)}(Q, q_l, q_\nu) = \underbrace{\delta_{EW}^{(1)}(Q, q_l, q_\nu; m_\gamma)}_{\text{SANC, D. Bardin et al.}} - 2\alpha\Re B(Q, q_l; m_\gamma)$$

QED–like corrections only:

$$\delta^{(1)}(Q, q_l)_{QED} = \frac{\alpha}{\pi}\left(\ln\frac{M}{m_l} + \frac{1}{2}\right)$$

Backup – non–IR YFS functions

One real hard photon:

$$\bar{\beta}_1^{(1)}(p_1, p_2, q_l, q_\nu, k) = \frac{1}{16s(2\pi)^5}\frac{1}{12}\sum\left|M^{(1)}\right|^2 - \tilde{S}(Q, q_l, k)\bar{\beta}_0^{(0)}(p_1, p_2, q_l, q_\nu)$$

$$\tilde{S}(Q, q_l, k) = -\frac{\alpha}{4\pi^2}\left(\frac{Q}{kQ} - \frac{q_l}{kq_l}\right)^2 \leftarrow \text{soft–photon factor}$$

Backup – matrix elements

$$M^{(0)}(\sigma_1,\sigma_2;\tau_1,\tau_2) = \frac{1}{Q^2-M_W^2+iM_W\Gamma_W}\sum_{\lambda=1,2,3} M_P^{(0)}(\sigma_1,\sigma_2;\lambda)M_D^{(0)}(\lambda;\tau_1,\tau_2)$$

$$M^{(1)}(\sigma_1,\sigma_2;\tau_1,\tau_2,\kappa) = \frac{1}{Q^2-M_W^2+iM_W\Gamma_W}\sum_{\lambda=1,2,3} M_P^{(0)}(\sigma_1,\sigma_2;\lambda)M_D^{(1)}(\lambda;\tau_1,\tau_2,\kappa)$$

$M \longrightarrow$ Spin amplitudes in Weyl-spinor representation
[cf. Hagiwara & Zeppenfeld, NP B274 (1986) 1]